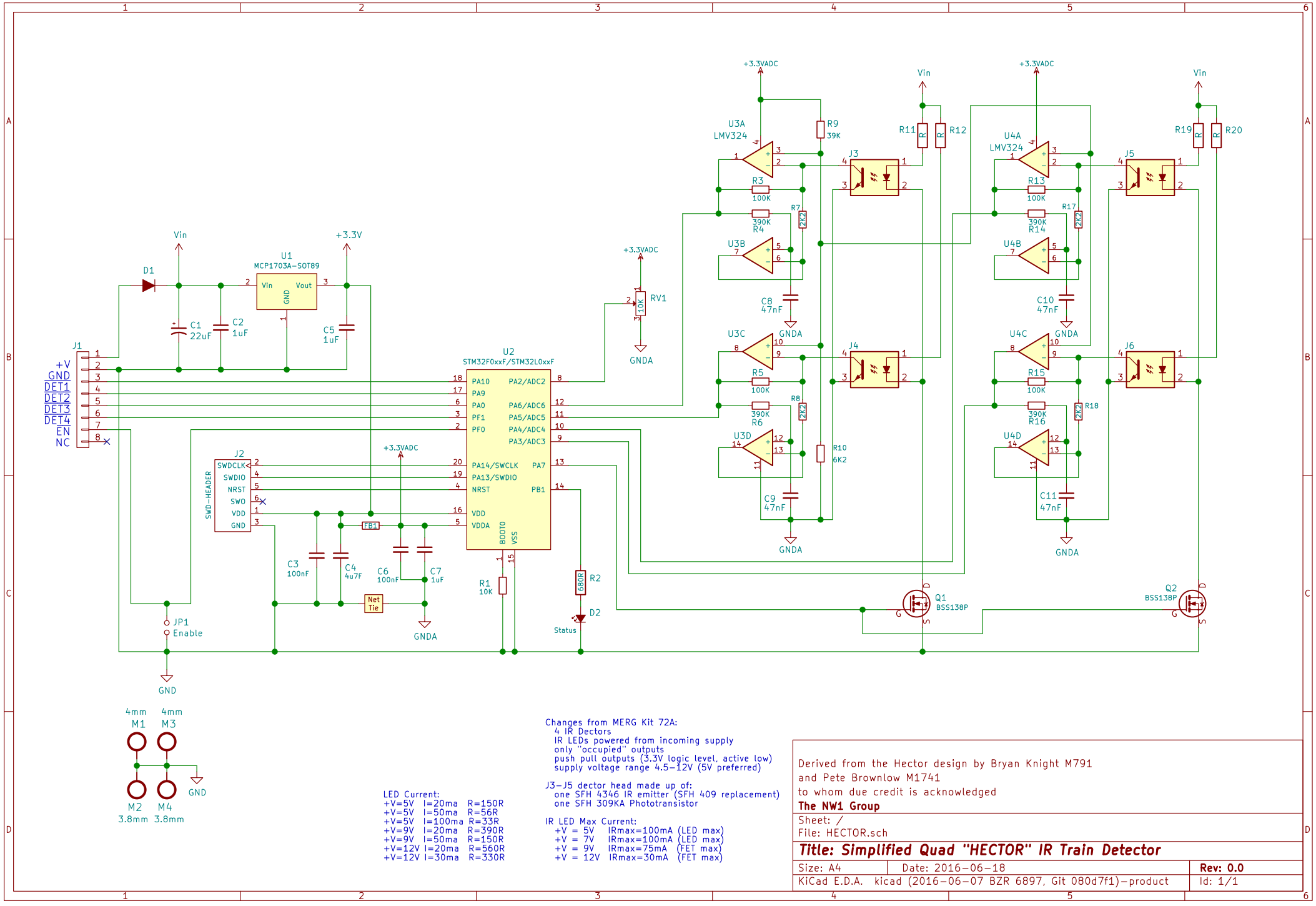

Changes from MERG Kit 72A:
- 4 IR Dectors
- IR LEDs powered from incoming supply
- only "occupied" outputs
- push pull outputs (3.3V logic level, active low)
- supply voltage range 4.5–12V (5V preferred)

J3–J5 dector head made up of:
- one SFH 4346 IR emitter (SFH 409 replacement)
- one SFH 309KA Phototransistor

IR LED Max Current:
- +V = 5V IRmax=100mA (LED max)
- +V = 7V IRmax=100mA (LED max)
- +V = 9V IRmax=75mA (FET max)
- +V = 12V IRmax=30mA (FET max)

LED Current:

+V=5V	I=20ma	R=150R
+V=5V	I=50ma	R=56R
+V=5V	I=100ma	R=33R
+V=9V	I=20ma	R=390R
+V=9V	I=50ma	R=150R
+V=12V	I=20ma	R=560R
+V=12V	I=30ma	R=330R

Derived from the Hector design by Bryan Knight M791
and Pete Brownlow M1741
to whom due credit is acknowledged
The NW1 Group

Sheet: /
File: HECTOR.sch

Title: Simplified Quad "HECTOR" IR Train Detector

Size: A4	Date: 2016-06-18	Rev: 0.0
KiCad E.D.A. kicad (2016-06-07 BZR 6897, Git 080d7f1)-product		Id: 1/1